EMC shield clamps for 35 mm top hat DIN rail, pluggable

with or without integrated strain relief

EMC shield clamps are used, where the shield of cables must be connected to the earth potential. They are easy to use and effective in earthing single cable shields.

When using types with integrated strain relief cables can be fixed via the cable jacket using cable ties. Thus strain relief in accordance with EN 62444 is achieved. We also offer EMC shield clamps with double strain relief function acc. to PROFINET installation guidelines.

Due to its special design the clamping ranges of the MSKL are very large while the dimensions are comparatively small. (Example: MSKL 3-12, assembled with a 12 mm cable shield: width 26.25 mm).

The staggered arrangement of the extremely slim shield clamp SFS|SKL maximises space utilisation. Suitable for applications that require EMC shielding close to connection points or controller inputs.

The shield clamps can be easily attached by snapping them onto 35 mm top hat DIN rails.

Specifications

Material	Shield clamp: Spring steel, zinc plated Shield bracket: Mild steel, galvanically zinc plated Snap foot: Spring steel
Properties	vibration proof
Mounting options	Snap-in

Advantages & benefits

- Partially with integrated strain relief
- Large contact area
- Shield contact and strain relief separated
- Quick assembly without tools
- The spring design requires no adjustments and will permanently maintain contact to the cable shield
- Designed for high density applications
- Shock and vibration resistant, maintenance free
- Integrated double strain relief function acc. to PROFINET installation guidelines

Product types & sizes

SF|MSKL 3-12

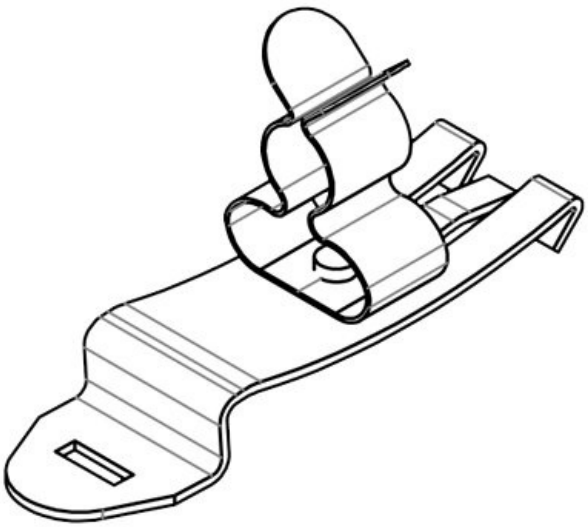

Part No.	**37616**	Min. shield diam.	**3 mm**
EAN	**4251269316937**	Max. shield diam.	**12 mm**
Package quantity	**10**	Length	**50,3 mm**
No. of shield clamps	**1**	Strain relief function	**No**
Shield clamp type	**MSKL**	Width	**15 mm**
For max. no. of cables	**1**	Height	**26 mm**
Shield diameter	**3 - 12 mm**		

SF|MSKL 8-18

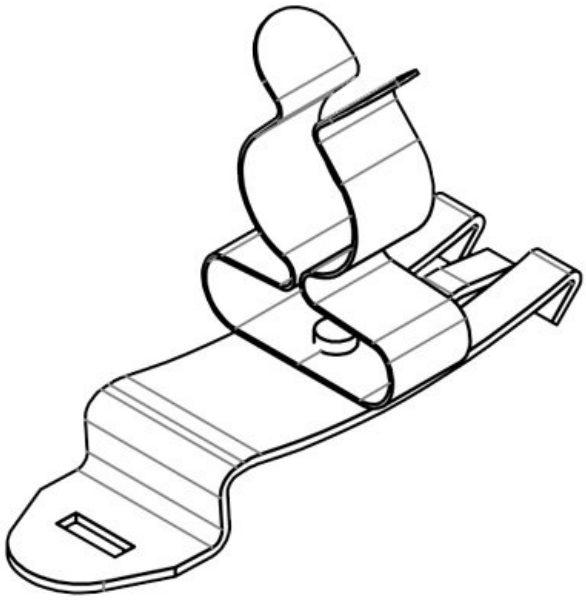

Part No.	**37618**	Min. shield diam.	**8 mm**
EAN	**4251269316944**	Max. shield diam.	**18 mm**
Package quantity	**10**	Length	**50,3 mm**
No. of shield clamps	**1**	Strain relief function	**No**
Shield clamp type	**MSKL**	Width	**20 mm**
For max. no. of cables	**1**	Height	**32,2 mm**
Shield diameter	**8 - 18 mm**		

SF|SKL 1.5-3

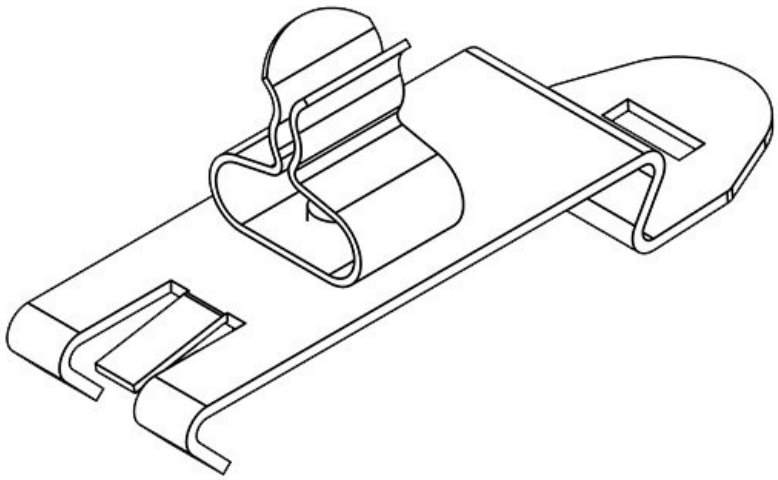

Part No.	**36243**	Min. shield diam.	**1,5 mm**
EAN	**4251269302329**	Max. shield diam.	**3 mm**
Package quantity	**10**	Length	**50,4 mm**
No. of shield clamps	**1**	Strain relief function	**No**
Shield clamp type	**SKL**	Width	**14 mm**
For max. no. of cables	**1**	Height	**20 mm**
Shield diameter	**1,5 - 3 mm**		

SF|SKL 3-6

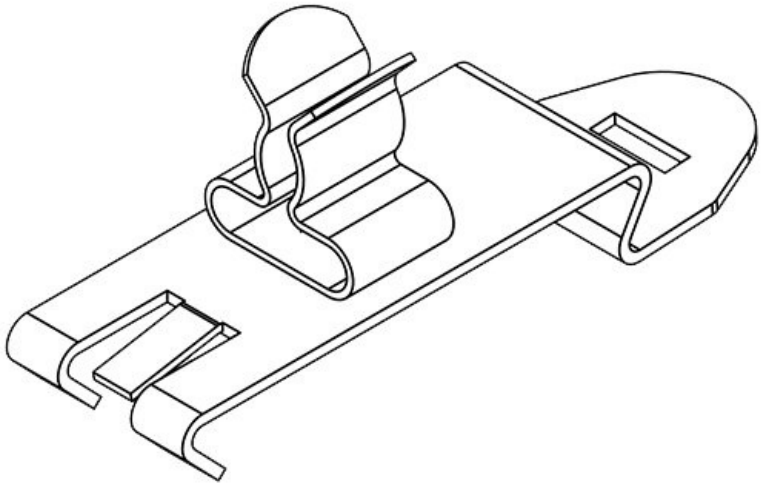

Part No.	**36244**	Min. shield diam.	**3 mm**
EAN	**4251269302336**	Max. shield diam.	**6 mm**
Package quantity	**10**	Length	**50,4 mm**
No. of shield clamps	**1**	Strain relief function	**No**
Shield clamp type	**SKL**	Width	**14 mm**
For max. no. of cables	**1**	Height	**20,5 mm**
Shield diameter	**3 - 6 mm**		

SF|SKL 6-8

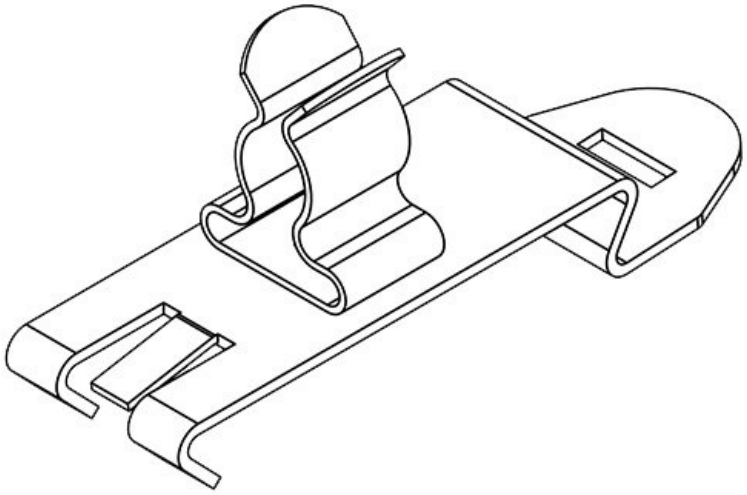

Part No.	**36245**	Min. shield diam.	**6 mm**
EAN	**4251269302 343**	Max. shield diam.	**8 mm**
Package quantity	**10**	Length	**50,4 mm**
No. of shield clamps	**1**	Strain relief function	**No**
Shield clamp type	**SKL**	Width	**14 mm**
For max. no. of cables	**1**	Height	**21,9 mm**
Shield diameter	**6 - 8 mm**		

SF|SKL 8-11

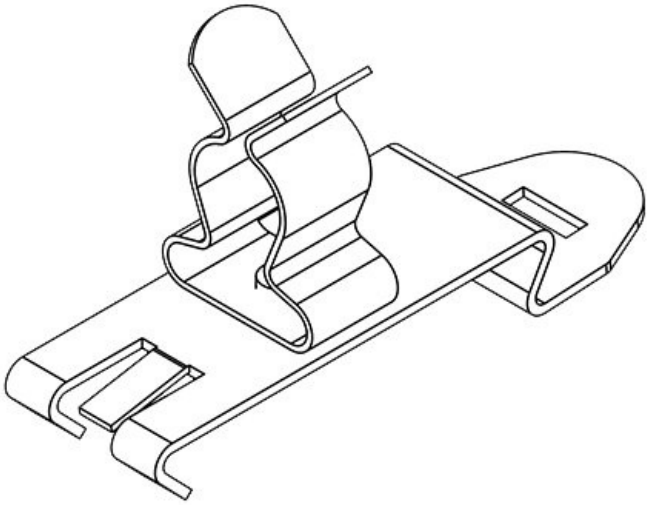

Part No.	**36246**	Min. shield diam.	**8 mm**
EAN	**4251269302 350**	Max. shield diam.	**11 mm**
Package quantity	**10**	Length	**50,4 mm**
No. of shield clamps	**1**	Strain relief function	**No**
Shield clamp type	**SKL**	Width	**14 mm**
For max. no. of cables	**1**	Height	**26,9 mm**
Shield diameter	**8 - 11 mm**		

SF|SKL 11-17

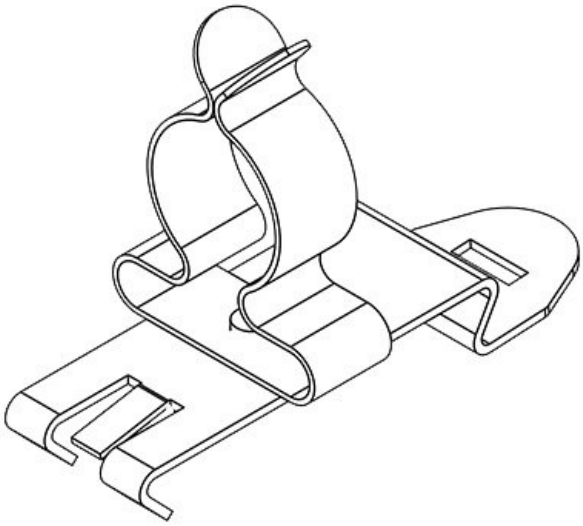

Part No.	**36247**	Min. shield diam.	**11 mm**
EAN	**4251269302 367**	Max. shield diam.	**17 mm**
Package quantity	**10**	Length	**50,4 mm**
No. of shield clamps	**1**	Strain relief function	**No**
Shield clamp type	**SKL**	Width	**21 mm**
For max. no. of cables	**1**	Height	**33,9 mm**
Shield diameter	**11 - 17 mm**		

SF|SKL 17-22

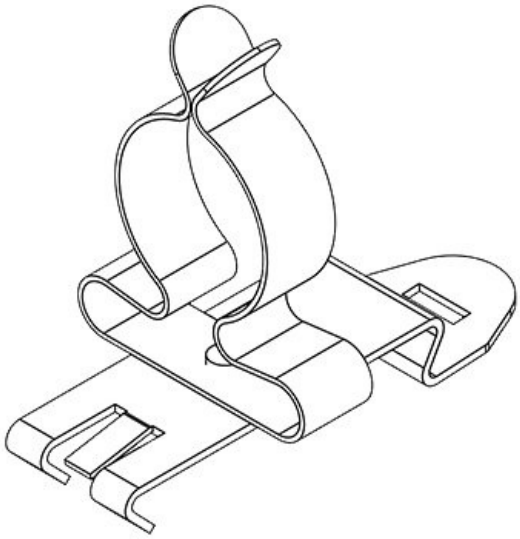

Part No.	**36248**	Min. shield diam.	**17 mm**
EAN	**4251269302374**	Max. shield diam.	**22 mm**
Package quantity	**10**	Length	**50,4 mm**
No. of shield clamps	**1**	Strain relief function	**No**
Shield clamp type	**SKL**	Width	**26,5 mm**
For max. no. of cables	**1**	Height	**41,4 mm**
Shield diameter	**17 - 22 mm**		

SF|SKL 22-30

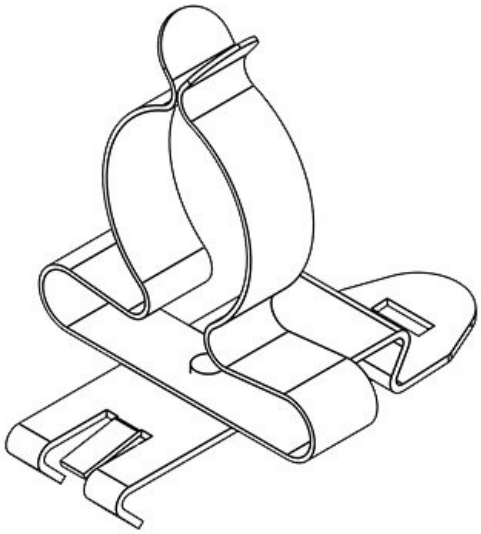

Part No.	**36249**	Min. shield diam.	**22 mm**
EAN	**4251269302381**	Max. shield diam.	**30 mm**
Package quantity	**10**	Length	**50,4 mm**
No. of shield clamps	**1**	Strain relief function	**No**
Shield clamp type	**SKL**	Width	**34,5 mm**
For max. no. of cables	**1**	Height	**45,8 mm**
Shield diameter	**22 - 30 mm**		

SF|SKL 30-38

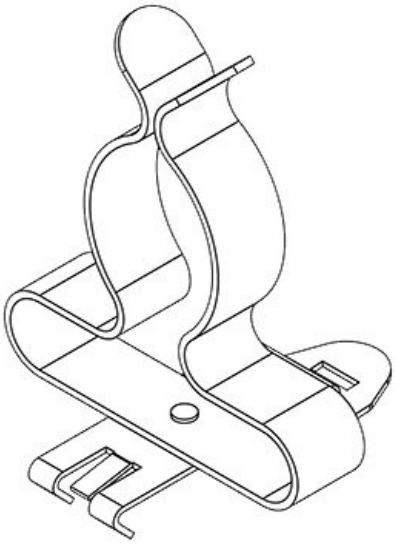

Part No.	**36250**	Min. shield diam.	**30 mm**
EAN	**4251269302398**	Max. shield diam.	**38 mm**
Package quantity	**10**	Length	**50,4 mm**
No. of shield clamps	**1**	Strain relief function	**No**
Shield clamp type	**SKL**	Width	**46,5 mm**
For max. no. of cables	**1**	Height	**68 mm**
Shield diameter	**30 - 38 mm**		

SF|SKL 38-48

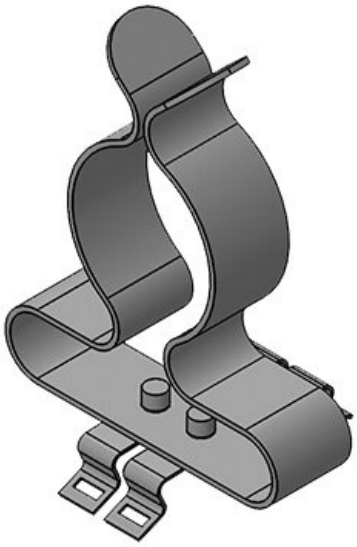

Part No.	**36252**	Min. shield diam.	**38 mm**
EAN	**4251269302411**	Max. shield diam.	**48 mm**
Package quantity	**10**	Length	**44 mm**
No. of shield clamps	**1**	Strain relief function	**No**
Shield clamp type	**SKL**	Width	**48,5 mm**
For max. no. of cables	**1**	Height	**77,5 mm**
Shield diameter	**38 - 48 mm**		

SFS|SKL 1.5-3

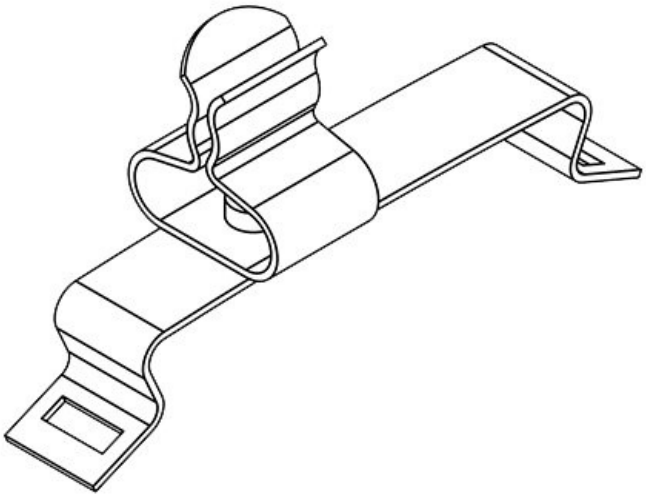

Part No.	**36810**	Min. shield diam.	**1,5 mm**
EAN	**4251269304873**	Max. shield diam.	**3 mm**
Package quantity	**10**	Length	**43,4 mm**
No. of shield clamps	**1**	Strain relief function	**No**
Shield clamp type	**SKL**	Width	**11,8 mm**
For max. no. of cables	**1**	Height	**21,5 mm**
Shield diameter	**1,5 - 3 mm**		

SFS|SKL 3-6

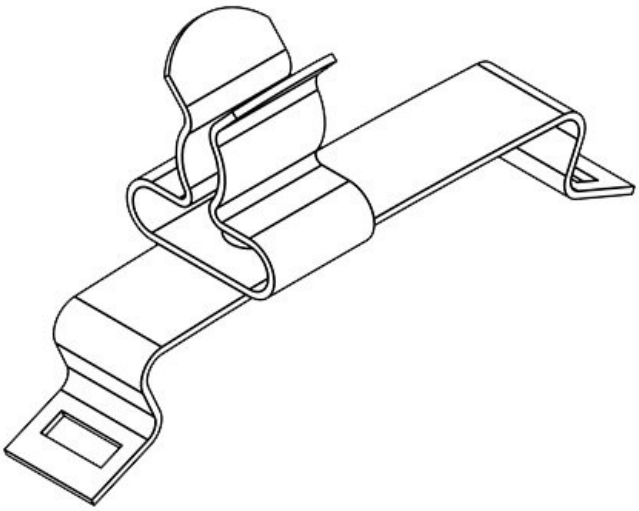

Part No.	**36815**	Min. shield diam.	**3 mm**
EAN	**4251269304880**	Max. shield diam.	**6 mm**
Package quantity	**10**	Length	**43,4 mm**
No. of shield clamps	**1**	Strain relief function	**No**
Shield clamp type	**SKL**	Width	**11,8 mm**
For max. no. of cables	**1**	Height	**22,2 mm**
Shield diameter	**3 - 6 mm**		

SFS|SKL 6-8

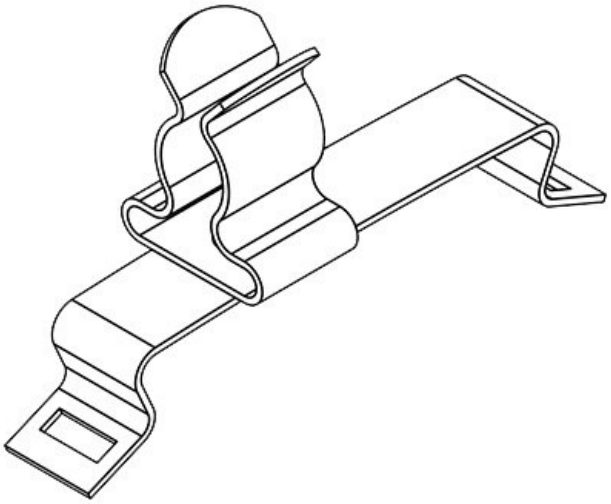

Part No.	**36820**	Min. shield diam.	**6 mm**
EAN	**4251269304897**	Max. shield diam.	**8 mm**
Package quantity	**10**	Length	**43,4 mm**
No. of shield clamps	**1**	Strain relief function	**No**
Shield clamp type	**SKL**	Width	**11,8 mm**
For max. no. of cables	**1**	Height	**23,6 mm**
Shield diameter	**6 - 8 mm**		

SFZ-M|MSKL 3-12

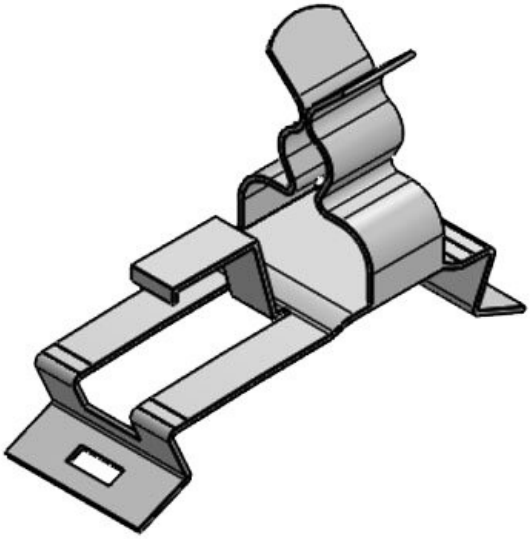

Part No.	**37620**	Min. shield diam.	**3 mm**
EAN	**4251269316951**	Max. shield diam.	**12 mm**
Package quantity	**10**	Length	**43,4 mm**
No. of shield clamps	**1**	Strain relief function	**Yes**
Shield clamp type	**MSKL**	Width	**15 mm**
For max. no. of cables	**1**	Height	**29,3 mm**
Shield diameter	**3 - 12 mm**	Mounting height	**20 mm**

SFZ-M|MSKL 8-18

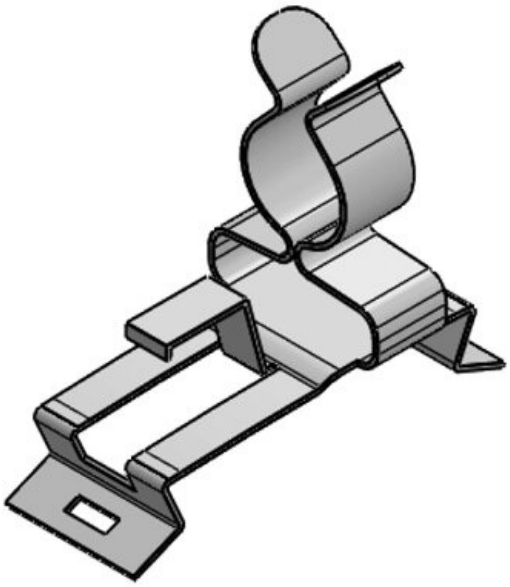

Part No.	**37622**	Min. shield diam.	**8 mm**
EAN	**4251269316968**	Max. shield diam.	**18 mm**
Package quantity	**10**	Length	**61,4 mm**
No. of shield clamps	**1**	Strain relief function	**Yes**
Shield clamp type	**MSKL**	Width	**20 mm**
For max. no. of cables	**1**	Height	**32,7 mm**
Shield diameter	**8 - 18 mm**		

SFZ|SKL 1.5-3

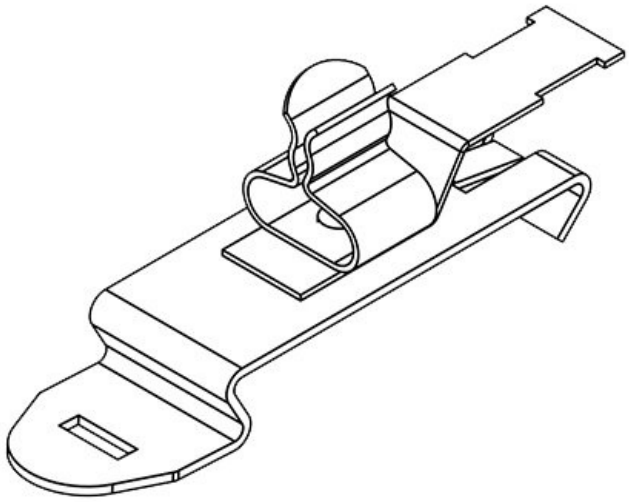

Part No.	**36850**	Min. shield diam.	**1,5 mm**
EAN	**4251269304903**	Max. shield diam.	**3 mm**
Package quantity	**10**	Length	**56,9 mm**
No. of shield clamps	**1**	Strain relief function	**Yes**
Shield clamp type	**SKL**	Width	**14 mm**
For max. no. of cables	**1**	Height	**20,3 mm**
Shield diameter	**1,5 - 3 mm**		

SFZ|SKL 3-6

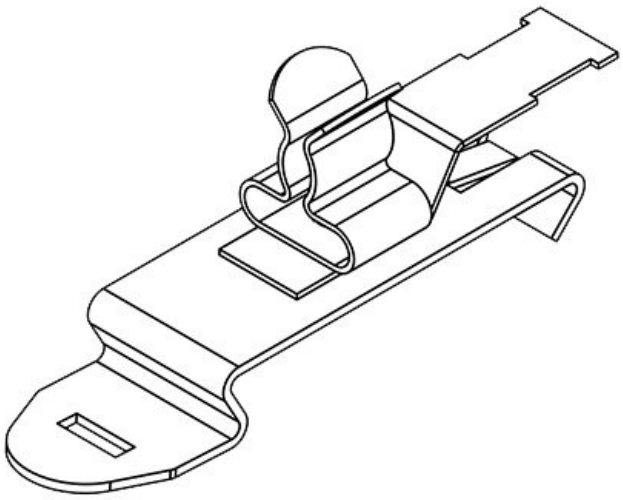

Part No.	**36855**	Min. shield diam.	**3 mm**
EAN	**4251269304910**	Max. shield diam.	**6 mm**
Package quantity	**10**	Length	**56,9 mm**
No. of shield clamps	**1**	Strain relief function	**Yes**
Shield clamp type	**SKL**	Width	**14 mm**
For max. no. of cables	**1**	Height	**21 mm**
Shield diameter	**3 - 6 mm**		

SFZ|SKL 6-8

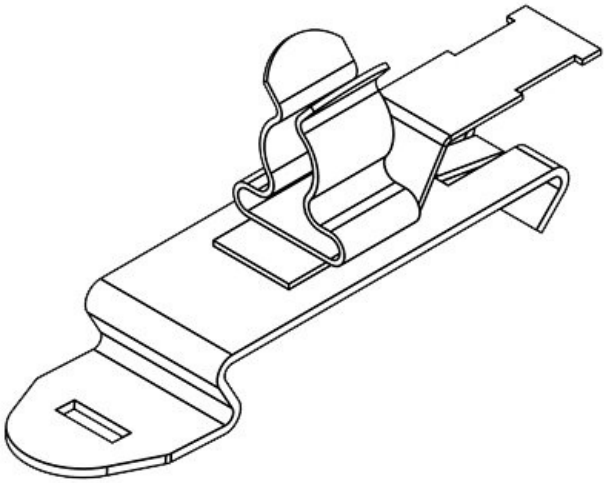

Part No.	**36860**	Min. shield diam.	**6 mm**
EAN	**4251269304927**	Max. shield diam.	**8 mm**
Package quantity	**10**	Length	**56,9 mm**
No. of shield clamps	**1**	Strain relief function	**Yes**
Shield clamp type	**SKL**	Width	**14 mm**
For max. no. of cables	**1**	Height	**22,4 mm**
Shield diameter	**6 - 8 mm**		

SFZ|SKL 8-11

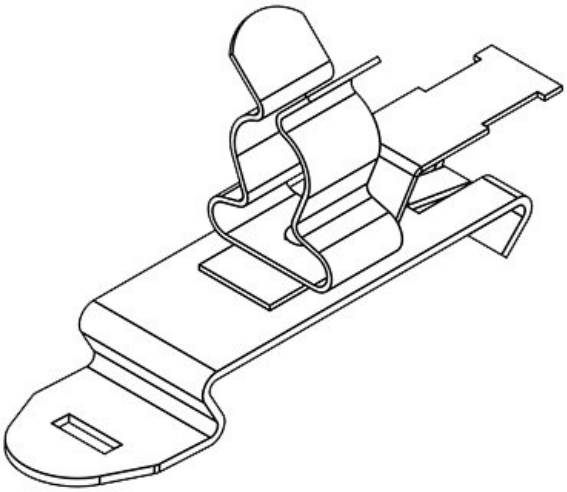

Part No.	**36865**	Min. shield diam.	**8 mm**
EAN	**4251269304934**	Max. shield diam.	**11 mm**
Package quantity	**10**	Length	**56,9 mm**
No. of shield clamps	**1**	Strain relief function	**Yes**
Shield clamp type	**SKL**	Width	**14 mm**
For max. no. of cables	**1**	Height	**27,4 mm**
Shield diameter	**8 - 11 mm**		

SFZ|SKL 11-17

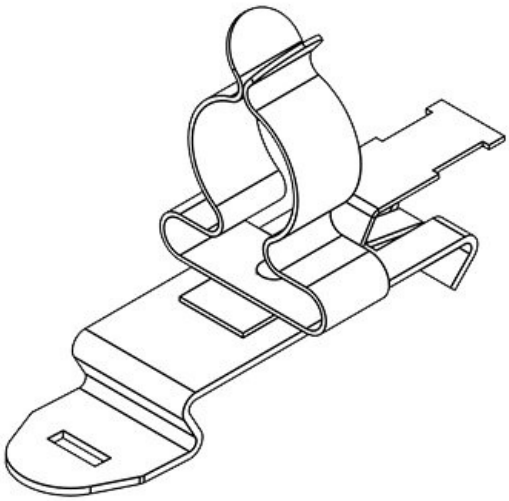

Part No.	**36870**	Min. shield diam.	**11 mm**
EAN	**4251269304941**	Max. shield diam.	**17 mm**
Package quantity	**10**	Length	**71,8 mm**
No. of shield clamps	**1**	Strain relief function	**Yes**
Shield clamp type	**SKL**	Width	**21 mm**
For max. no. of cables	**1**	Height	**34,4 mm**
Shield diameter	**11 - 17 mm**		

SFZ|SKL 17-22

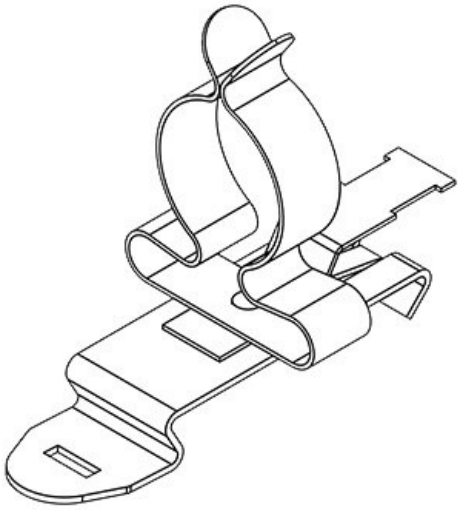

Part No.	**36875**	Min. shield diam.	**17 mm**
EAN	**4251269304958**	Max. shield diam.	**22 mm**
Package quantity	**10**	Length	**71,8 mm**
No. of shield clamps	**1**	Strain relief function	**Yes**
Shield clamp type	**SKL**	Width	**26,5 mm**
For max. no. of cables	**1**	Height	**41,9 mm**
Shield diameter	**17 - 22 mm**		

SFZ|SKL 22-30

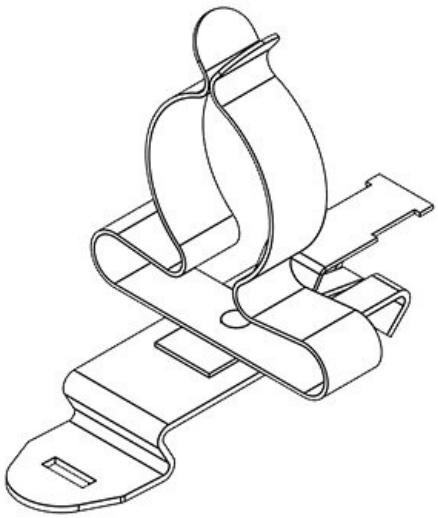

Part No.	**36880**	Min. shield diam.	**22 mm**
EAN	**4251269304965**	Max. shield diam.	**30 mm**
Package quantity	**10**	Length	**71,8 mm**
No. of shield clamps	**1**	Strain relief function	**Yes**
Shield clamp type	**SKL**	Width	**35 mm**
For max. no. of cables	**1**	Height	**46 mm**
Shield diameter	**22 - 30 mm**		

SFZ|SKL 30-38

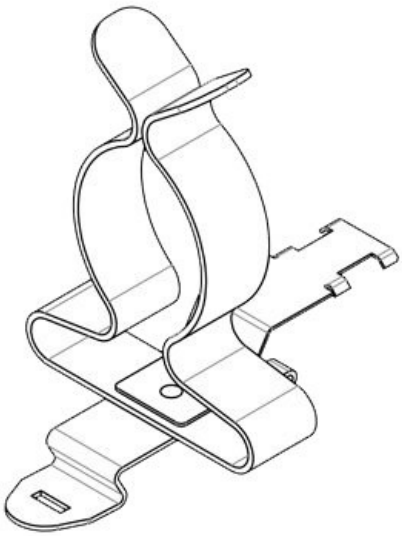

Part No.	**36885**	Min. shield diam.	**30 mm**
EAN	**4251269319105**	Max. shield diam.	**38 mm**
Package quantity	**10**	Length	**71,8 mm**
No. of shield clamps	**1**	Strain relief function	**Yes**
Shield clamp type	**SKL**	Width	**46,5 mm**
For max. no. of cables	**1**	Height	**68 mm**
Shield diameter	**30 - 38 mm**		

SF2Z-M|MSKL 3-12

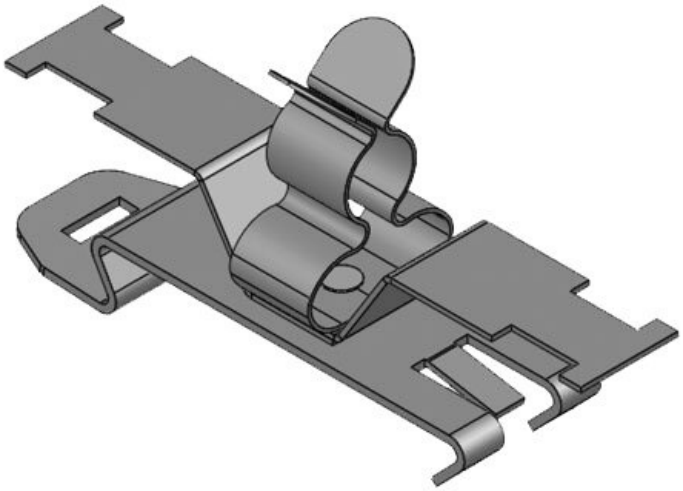

Part No.	**37620.150**	Min. shield diam.	**3 mm**
EAN	**4251269321146**	Max. shield diam.	**12 mm**
Package quantity	**10**	Length	**59 mm**
No. of shield clamps	**1**	Strain relief function	**Yes**
Shield clamp type	**MSKL**	Width	**14,9 mm**
For max. no. of cables	**1**	Height	**28,4 mm**
Shield diameter	**3 - 12 mm**	Mounting height	**21,5 mm**

SF2Z-M|MSKL 8-18

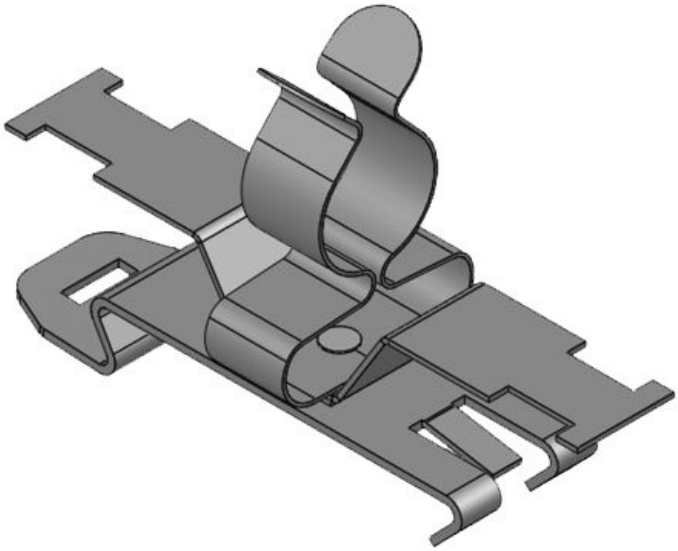

Part No.	**37622.150**	Min. shield diam.	**8 mm**
EAN	**4251269321153**	Max. shield diam.	**18 mm**
Package quantity	**10**	Length	**59 mm**
No. of shield clamps	**1**	Strain relief function	**Yes**
Shield clamp type	**MSKL**	Width	**19,7 mm**
For max. no. of cables	**1**	Height	**34,7 mm**
Shield diameter	**8 - 18 mm**	Mounting height	**27,7 mm**

SF2Z|SKL 1.5-3

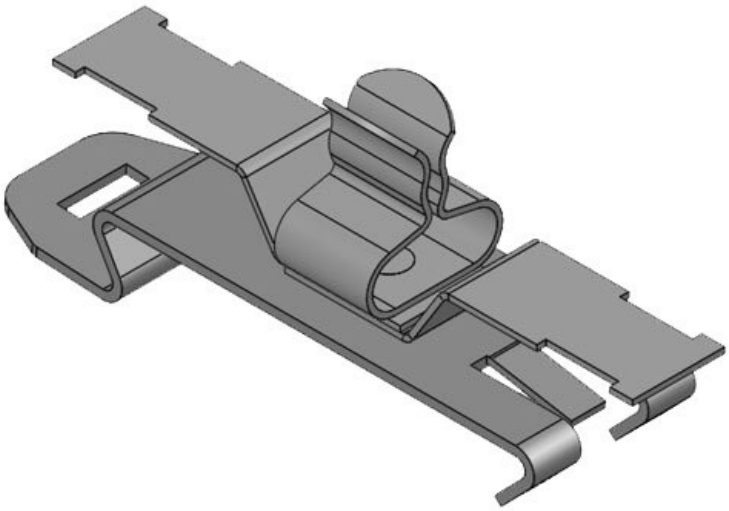

Part No.	**36850.150**	Min. shield diam.	**1,5 mm**
EAN	**4251269321160**	Max. shield diam.	**3 mm**
Package quantity	**10**	Length	**54,5 mm**
No. of shield clamps	**1**	Strain relief function	**Yes**
Shield clamp type	**SKL**	Width	**14 mm**
For max. no. of cables	**1**	Height	**20,8 mm**
Shield diameter	**1,5 - 3 mm**	Mounting height	**13,9 mm**

SF2Z|SKL 3-6

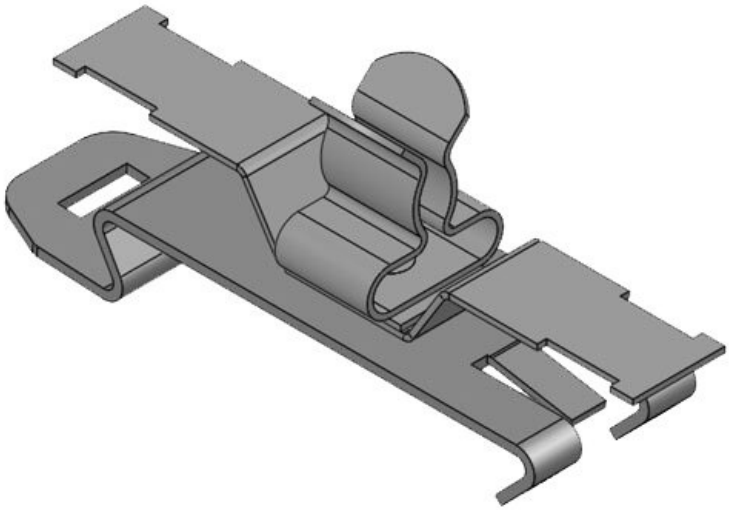

Part No.	**36855.150**	Min. shield diam.	**3 mm**
EAN	**4251269321177**	Max. shield diam.	**6 mm**
Package quantity	**10**	Length	**54,5 mm**
No. of shield clamps	**1**	Strain relief function	**Yes**
Shield clamp type	**SKL**	Width	**14 mm**
For max. no. of cables	**1**	Height	**21,4 mm**
Shield diameter	**3 - 6 mm**	Mounting height	**14,5 mm**

SF2Z|SKL 6-8

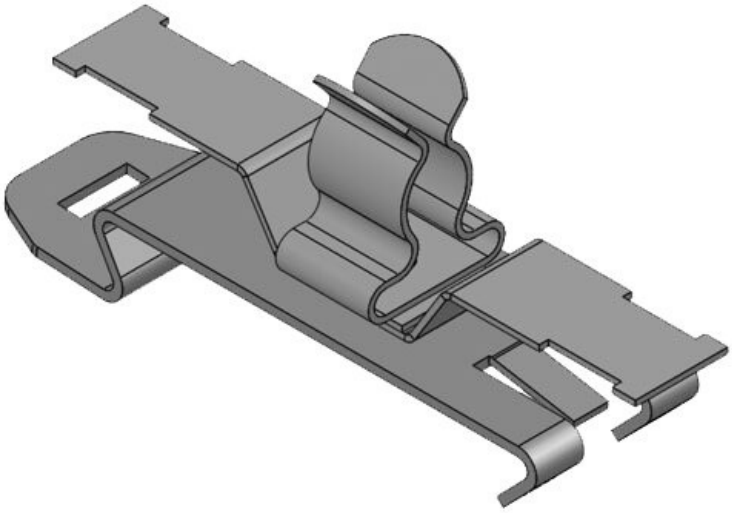

Part No.	**36860.150**	Min. shield diam.	**6 mm**
EAN	**4251269321184**	Max. shield diam.	**8 mm**
Package quantity	**10**	Length	**54,5 mm**
No. of shield clamps	**1**	Strain relief function	**Yes**
Shield clamp type	**SKL**	Width	**14 mm**
		Height	**22,9 mm**
For max. no. of cables	**1**	Mounting height	**16 mm**
Shield diameter	**6 - 8 mm**		

SF2Z|SKL 8-11

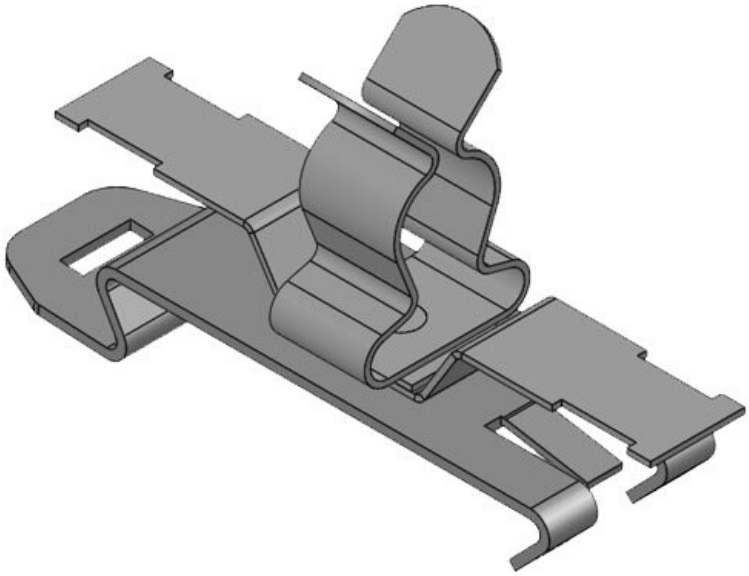

Part No.	**36865.150**	Min. shield diam.	**8 mm**
EAN	**4251269321191**	Max. shield diam.	**11 mm**
Package quantity	**10**	Length	**54,5 mm**
No. of shield clamps	**1**	Strain relief function	**Yes**
Shield clamp type	**SKL**	Width	**14 mm**
		Height	**27,9 mm**
For max. no. of cables	**1**	Mounting height	**21 mm**
Shield diameter	**8 - 11 mm**		

SF2Z|SKL 11-17

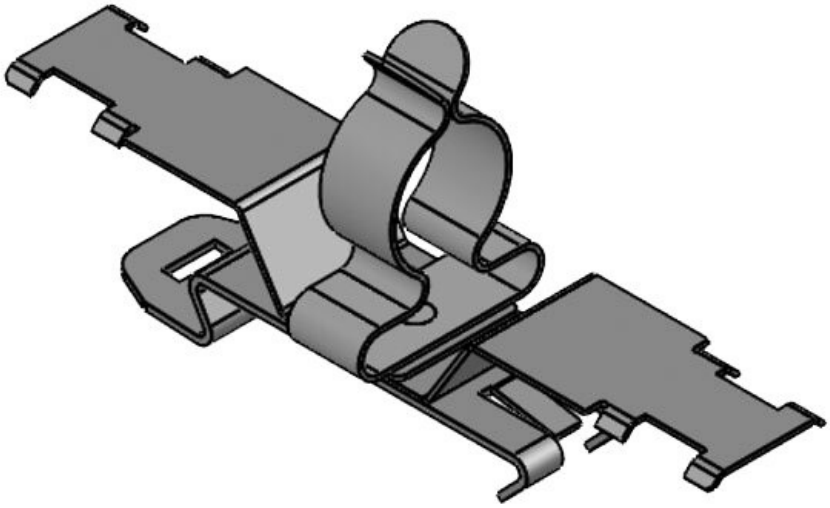

Part No.	**36870.150**	Min. shield diam.	**11 mm**
EAN	**4251269321207**	Max. shield diam.	**17 mm**
Package quantity	**10**	Length	**80 mm**
No. of shield clamps	**1**	Strain relief function	**Yes**
Shield clamp type	**SKL**	Width	**21 mm**
		Height	**34,9 mm**
For max. no. of cables	**1**	Mounting height	**28 mm**
Shield diameter	**11 - 17 mm**		

SF2Z|SKL 17-22

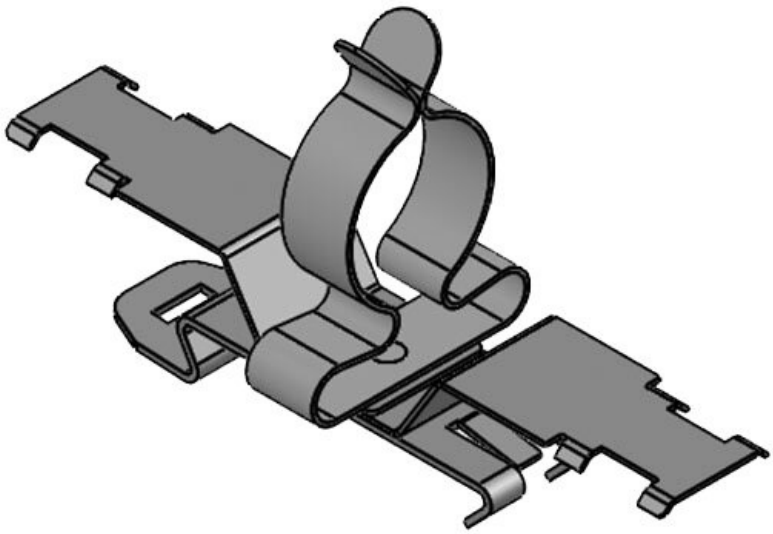

Part No.	**36875.150**	Min. shield diam.	**17 mm**
EAN	**4251269321214**	Max. shield diam.	**22 mm**
Package quantity	**10**	Length	**80 mm**
No. of shield clamps	**1**	Strain relief function	**Yes**
Shield clamp type	**SKL**	Width	**26,5 mm**
For max. no. of cables	**1**	Height	**42,4 mm**
Shield diameter	**17 - 22 mm**	Mounting height	**35,5 mm**

SF2Z|SKL 22-30

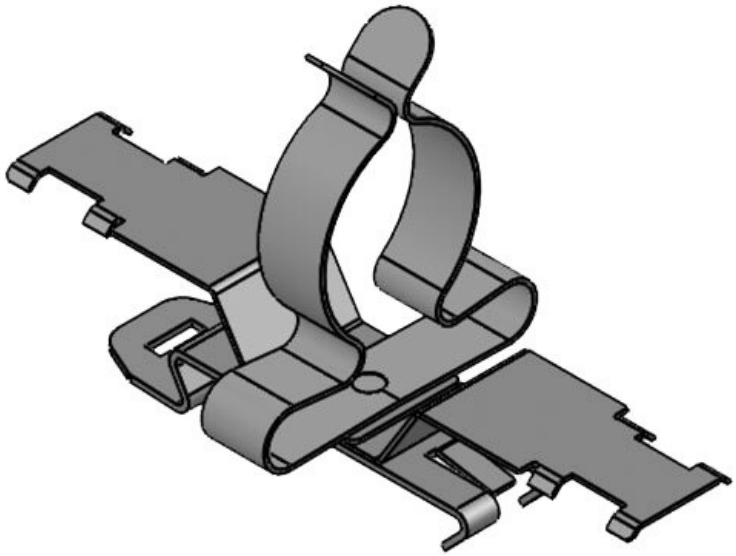

Part No.	**36880.150**	Min. shield diam.	**22 mm**
EAN	**4251269321221**	Max. shield diam.	**30 mm**
Package quantity	**10**	Length	**80 mm**
No. of shield clamps	**1**	Strain relief function	**Yes**
Shield clamp type	**SKL**	Width	**35 mm**
For max. no. of cables	**1**	Height	**47 mm**
Shield diameter	**22 - 30 mm**	Mounting height	**40,1 mm**

SFS single M3

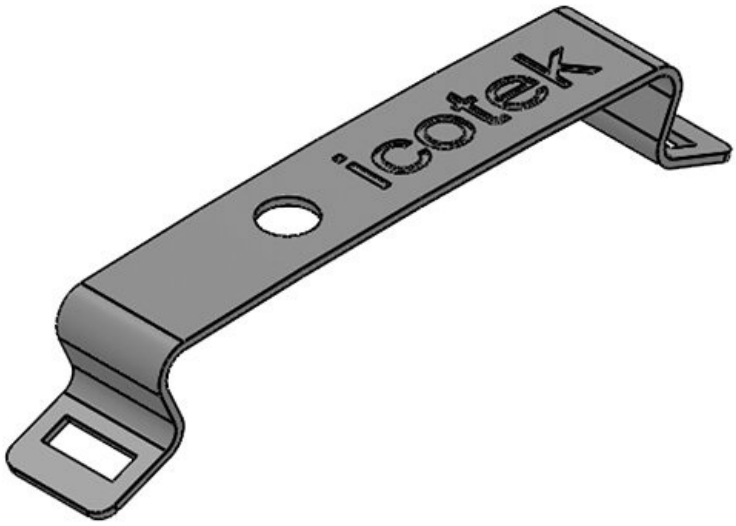

Part No.	**36229**	Diam. of screw holes	**3,2 mm**
EAN	**4251269302237**		
Package quantity	**10**		
Length	**43,4 mm**		
Width	**7 mm**		
Height	**8,5 mm**		
No. of screw holes	**1**		

MF single M4

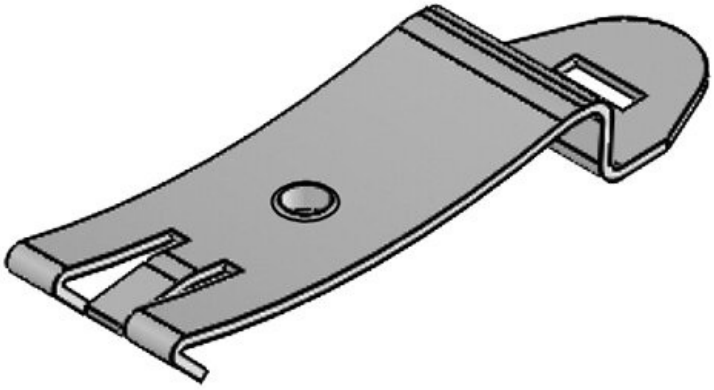

Part No.	**36230**	Diam. of screw holes	**4,1 mm**
EAN	**4251269302244**	Thread	**M4**
Package quantity	**10**		
Length	**50,3 mm**		
Width	**14 mm**		
Height	**6,8 mm**		
No. of screw holes	**1**		

MF single M5

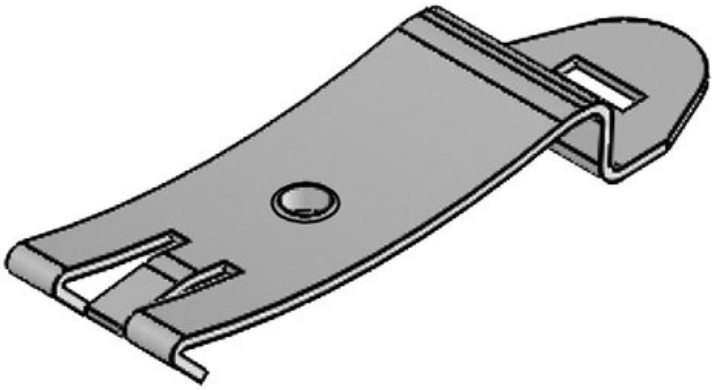

Part No.	**36221**	Diam. of screw holes	**5,1 mm**
EAN	**4251269319167**	Thread	**M5**
Package quantity	**10**		
Length	**50,3 mm**		
Width	**14 mm**		
Height	**6,8 mm**		
No. of screw holes	**1**		

icotek®
smart cable management